byonoy

Instructions for Use

Absorbance 96

Valid for Model Number DE MMA

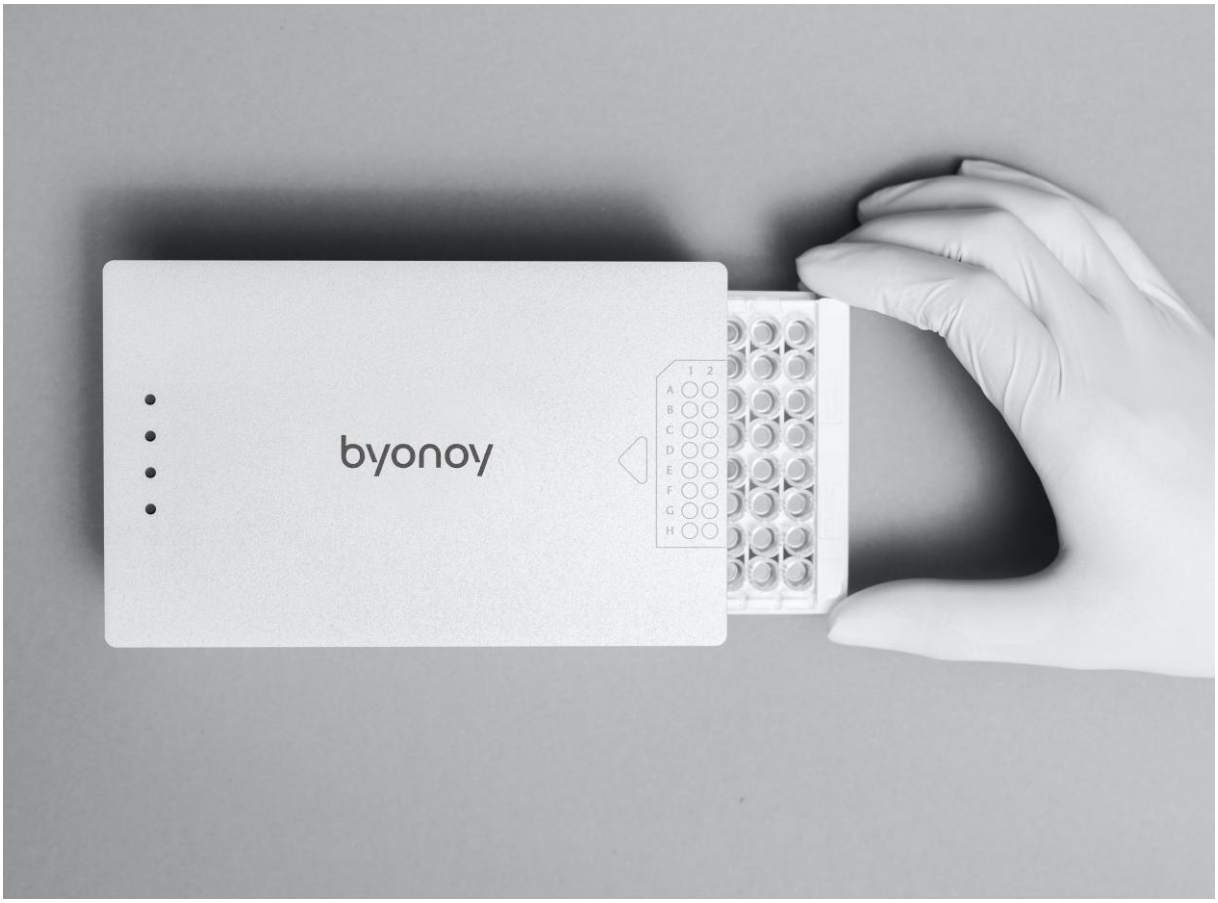

Instructions for Use
Absorbance 96
Version 4.2 (12/08/2025)
©Copyright 2022 by Byonoy GmbH. All rights reserved.

Manufacturer: Byonoy GmbH
Schützenstraße 21
22761 Hamburg, Germany

00 49 40 5379 866 00
service@byonoy.com
www.byonoy.com

Dear customer,

We are delighted that you have chosen the Absorbance 96. To take full advantage of the instrument's performance and to enjoy your instrument for many years, please read these instructions for use carefully before installation and commissioning. Operate the instrument in accordance with these instructions. The operating-safety and function of the instrument can only be guaranteed if both the general safety regulations and accident prevention regulations of the legislator as well as the safety instructions in this manual are observed. We accept no liability for any damage resulting from improper use or incorrect operation.

ⓘ **Ensure that the manual is always accessible and is read and understood by all persons operating the instrument.**

This user manual may only be used according to its intended purpose. It may not be reproduced, changed, or translated in another language without the prior written consent of Byonoy GmbH.

This document is subject to technical changes and updates.

TABLE OF CONTENTS

1 General information 1

2 Overview of the Absorbance 96 4

2.1 Scope of application 4
2.2 Measurement method 4
2.3 Absorbance 96 System 5
2.4 Consumables 6

3 Preparing the product for use 8

3.1 Unpacking, storage, and transport 8
3.2 Supplied materials 8
3.3 Working environment 9

4 Operation 10

4.1 App installation procedure and updates 10
4.2 Computer connection 10
4.3 Assay 11

5 Signals and troubleshooting 13

5.1 Signal lights 13
5.2 Troubleshooting 13

6 Maintenance and cleaning 15

6.1 Maintenance 15
6.2 Cleaning 17
6.3 Technical support 19
6.4 Repairs 19

7 Technical specifications 20

8 Guarantee 22

9 Compliance 23

9.1 CE 23
9.2 FCC 23

9.3 ISED 23

1 General information

Important: Follow the instructions for use

Any commissioning or handling of the instrument requires precise knowledge and notice of this manual. The device is intended for the described use only.

In this manual and on the label of the reader, particularly important remarks are labeled as followed:

Symbol	Description
	**Warning: This is a warning that indicates an immediately or potentially dangerous situation, which, if not avoided, will result in death or serious injury.**
	**Caution: Caution indicates a potentially hazardous situation, which, if not avoided, could result in minor or moderate injury.**
	**Information: This is a piece of information indicating certain properties that must be observed.**
	**Marking that indicates conformity with health, safety, and environmental protection standards for products sold within the European Economic Area.**
	**Certification mark employed on electronic products manufactured or sold in the United States.**
	**Disposal of used electrical and electronic equipment**
	**Medical Device Manufacturer**
	**Serial number**
	**Consult instruction for use (user manual)**

REF Catalogue number

Liability for function and damage

Liability for the function of the device shall, in any case, pass to the owner or operator if the device is improperly maintained, repaired, or modified by persons who do not belong to the authorized service personnel, or if it is handled in a way that does not comply with its intended use. The service and operation of the product must be in accordance with this manual. Byonoy shall not be liable for damages resulting from non-observance of the information above. Warranty and liability conditions of the terms of sale and delivery of Byonoy are not extended by the information above.

Information

ⓘ An incorrect working environment can lead to a reduction in service life, damage to the device, or measurement errors. Please note the explanations and warnings in chapter •.

ⓘ To avoid measurement errors, it is essential to ensure that the instrument is connected properly and that the experiments are carried out correctly. Please note the explanations and warnings in chapter 3.

ⓘ Incorrect cleaning of the instrument can reduce its service life and can cause damage to the instrument. Please note the explanations and warnings in chapter 6.2.

ⓘ Follow all safety instructions on the device and in the attached documents.

ⓘ Follow all general precautions that apply to electrical instruments.

Disposal of used electrical and electronic equipment



The symbol on the product or its packaging indicates that this product is not to be treated as normal household waste. It must be disposed of at a collection point for the recycling of electrical and electronic equipment. By contributing to the correct disposal of this product, you protect the environment and the health of your fellow human beings. Recycling helps to reduce the consumption of raw materials. For further information on how to recycle this product, please contact your local authority or municipal waste disposal centres.

Byonoy offers a return option for this product, possibly with a fee. For information regarding the return and disposal process, please contact the service.
Email: service@byonoy.com
Telefon: +49 40 5379 866 00

Working with biological and harmful material

The Absorbance 96 is not to be used for the measurement of biohazardous substances.

Always observe the manufacturer's hazard information pertaining to the substances to be measured.

The instrument does not produce any toxic or harmful gases or substances. During the measurement, make sure that there are no toxic or harmful substances in the microtiter plate.

2 Overview of the Absorbance 96

2.1 Scope of application

The Absorbance 96 is an optical laboratory instrument for measuring the absorbance (optical density) of biological or non-biological samples in ANSI/SBS-standard 96-well microtiter plates in accordance with the specifications described in the user manual. The Absorbance 96 is intended for research and other non-in-vitro-diagnostic analyses only. It is to be operated by trained laboratory personnel and is intended for professional use.

2.2 Measurement method

The Absorbance 96 is designed to carry out sensitive absorbance measurements. It measures the optical density (OD) of samples at defined wavelengths.

Absorption

Absorption refers to the amount of light absorbed by a medium. Absorption reduces transmission. Transmission is the ratio of incident to transmitted light. Accordingly, the degree of transmission is calculated as follows

$$T = (I/I_0)$$

where I is transmitted light and I_0 is incident light.

Optical Density

Optical density is a measure of the attenuation of light radiation after it has passed through a medium. Optical density is the logarithmic quantity that describes the reciprocal of the transmittance T:

$$OD = log(I_0/I)$$

where I is the transmitted light and I_0 is incident light.

Optical density is the absorbance of the sample plus other attenuating effects such as scattered light due to turbidity. It is therefore necessary to avoid scattered light in order to measure absorbance correctly.

If no other attenuating effects are present, absorbance = optical density.

2.3 Absorbance 96 System

Absorbance 96 Reader

The Absorbance 96 reader is an absorbance-based measuring device, i. e. a measuring instrument, with which the absorbance values of a 96-well microtiter plate can be read, recorded and provided for further processing. The Absorbance 96 is a solid-state microplate reader and has 96 detection units, allowing measurement without a scanning mechanism.

In the upper part of the measuring instrument, there are up to 4 LED light sources with different wavelengths and up to 4 interference filters. The four signal lights on the top of the reader show which measuring channel is being used for the current measurement.

The microtiter plate is inserted manually into the slot of the device. There are two raised locking-edges at the bottom of the slot, as well as an arrow for visual inspection. The arrow becomes wholly visible only after complete insertion of the microtiter plate into the slot.

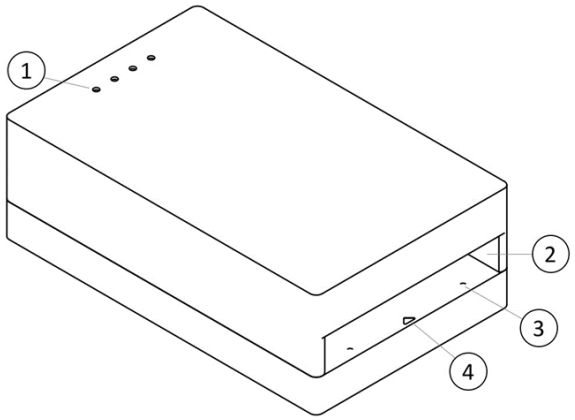

Figure 1. Visual representation of the product from the front, top. 1. Signal lights. 2. Slot for microtiter plate. 3. Raised locking-edges. 4. Arrow.

On the back of the Absorbance 96 there is a Micro-USB port for connecting the instrument to a computer via the included Micro-USB cable. Furthermore, there is an eject button for ejecting the microtiter plate out of the slot.

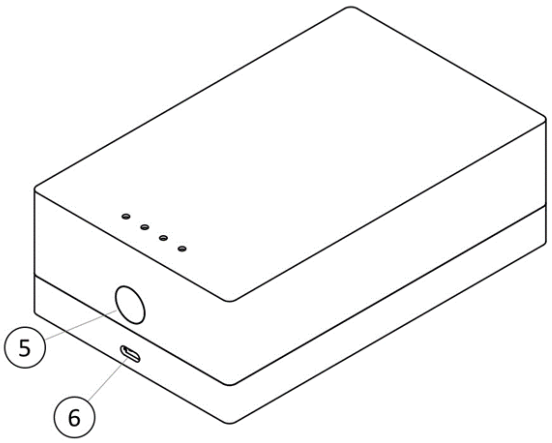

Figure 2. Visual representation of the product from behind, top. 5. Eject button. 6. Micro-USB port.

Power consumption

The Absorbance 96 is an analytical instrument with very low power consumption. It is operated by a Micro-USB cable and the total power consumption is generally less than 2.5 watts.

Absorbance 96 App

The reader is controlled via the Absorbance 96 App. The operation of the app is described in-detail in a separate user manual.

2.4 Consumables

With the Absorbance 96, ANSI/SBS Standard 96-well microtiter plates can be used. Only certain microplate types can be used with the Absorbance 96 (see chapter 7).

When using microtiter plates, always check the specifications of the microtiter plate manufacturer. Not all microtiter plates of a particular manufacturer are the same in design,

materials, or configuration. The temperature stability within the microtiter plate can depend on the type of microtiter plate used.

3 Preparing the product for use

3.1 Unpacking, storage, and transport

Unpacking

Remove the packaging material and carefully place the device on a firm and level surface. Check the device for external damage and check the materials supplied (see chapter 3.2).

The device is packed in a specially designed cardboard box. Keep the packaging material. If the device must be returned for repair, the original packaging material must be used.

Storage and protection during the intervals of normal use

ⓘ **Protect the device from moisture and dust during prolonged storage.**

ⓘ **Do not store the device next to heat sources and protect it from direct sunlight.**

The temperature for storage should be within the recommended temperature range (see chapter 7).

Transportation

Before transportation, unplug the instrument and ensure there is no microtiter plate inside the device. Depending on the transport distance, use the original packaging material. Make sure that the new location meets the requirements described in chapter •.

⚠ **To avoid spillage and contamination, make sure that there is no microtiter plate inside the instrument before transport.**

ⓘ **Always transport the product well-packaged to avoid damage in transit.**

3.2 Supplied materials

When unpacking the device, please check that the following components are present:

- Absorbance 96
- Micro-USB cable
- Hex key
- Microfiber cloth
- Information card with the download link
- Calibration certificate

3.3 Working environment

Due to its small size, the Absorbance 96 can be operated very well in various working environments.

However, the following warnings must be observed. Ignoring them may lead to measurement errors and a reduction in the expected lifetime or damage to the device:

ⓘ **The device should stand on a level surface, free from dust and vibrations.**

ⓘ **Do not operate the device near heat sources or under direct sunlight.**

ⓘ **The ambient temperature and the humidity should be within the recommended range (see chapter 7).**

ⓘ **Place the instrument in a horizontal position secured against falling.**

4 Operation

Before commissioning the Absorbance 96, you should carefully read and understand the entire manual to familiarize yourself with the system.

The Absorbance 96 is controlled via the Absorbance 96 App, including the analysis of measurement data. The functions of the app are detailed in a separate user manual.

4.1 App installation procedure and updates

The app is compatible with Windows und MacOS operating systems (see chapter 7).

To install the Absorbance 96 App, visit the following webpage: s.byonoy.com/abs96. Download the latest version of the App for your operating system and follow the steps in the Setup Wizard to complete the installation.

Modern operating systems offer plug and play functionality. Older operating systems may require manual installation of the drivers. The drivers for Windows are available at s.byonoy.com/abs96.

To install the proper drivers and software on the computer, the user must have administrator rights or obtain such permissions.

4.2 Computer connection

The Absorbance 96 requires a connection to the computer for power supply, starting the experiment, and data transfer. Insert the Micro-USB cable into the Absorbance 96 and the USB port of the computer. The Absorbance 96 starts automatically when connected to a computer via the Micro-USB cable and the software automatically establishes a connection.

Always use the included Micro-USB cable for the connection to your computer.

Connect the instrument directly to your computer and do not use an external USB hub.

The device may only be operated at a USB port USB 2/USB 3 with 5 VDC and a maximum of 3 A of a certificated computer (with certification mark of an approved

testing laboratory). Use an adapter cable on USB 3.1 with type C plug connection, which ensures the profile 1: 5 V@2.0 A.

When the Absorbance 96 is switched on, the signal lights on the top of the instrument light up. Each time the instrument is switched on, an internal self-test is performed to ensure there are no malfunctions.

If no connection between the instrument and the computer is established, install the driver for the USB connection. The drivers for Windows are available at s.byonoy.com/abs96.

4.3 Assay

Microtiter plate insertion

To avoid spills, the microtiter plate must be inserted slowly into the slot of the Absorbance 96. Spillage can cause drops of reagents interfering with the optical path, which could lead to incorrect measurement results.

⚠ **Insert the plate cautiously and slow to avoid spills.**

ⓘ **When inserting the microtiter plate, pay attention to its alignment.**

ⓘ **Make sure that the microtiter plate was inserted in the slot completely. In that case, the arrow at the bottom of the slot is visible completely.**

ⓘ **The bottom of the microtiter plate must be dry before it is inserted into the instrument. If the microtiter plate is wet at the bottom, dry it with a paper towel or similar.**

Assay readout

Once all settings have been completed, the measurement can be started. The app will automatically guide the user through the readout process.

In order to guarantee a correct measurement result, please pay attention to the indications in the Absorbance 96 App and heed the following warnings:

ⓘ **Shocks of the Absorbance 96 or the microtiter plate can cause an unwanted signal. Therefore, neither the Absorbance 96 nor the microtiter plate should be touched during measurement.**

ⓘ **Note that the system depends on a clean and dust-free environment. Therefore, do not wear powdered safety gloves.**

ⓘ **Ensure that no direct sunlight or other strong light sources shine into the slot of the Absorbance 96.**

After a successful measurement, the results section will open automatically in the app.

Removing microtiter plate

The microtiter plate must be removed from the Absorbance 96 after the readout. To do this, push the eject button on the rear side of the device.

ⓘ **Make sure not to store a microtiter plate filled with reagents in the device, as evaporating gases can damage the device and especially the filters.**

5 Signals and troubleshooting

5.1 Signal lights

Table 1. Explanation of the signal lights

Activity of the signal light	Meaning
All signal lights flash simultaneously	Error, software shows error message
No signal lights light up	Device is off Device is waiting for input Device is defective
All signal lights light up briefly in sequence	Self-test after connection to power
Signal light of the respective measuring channel flashes/illuminates continuously	Initialization/measurement in progress

5.2 Troubleshooting

If there is an error, all four signal lights flash simultaneously. In this case, check the software to see which error is present.

Table 2. Error messages and solutions

Type of error	Cause	Solution
Initialization failed.	There was a microtiter plate in the slot during initialization.	Remove the plate.
	The inside of the slot is dirty.	Clean the inside of the slot according to the cleaning instructions in chapter 6.2.
	Irrecoverable hardware error.	Contact the service department.
Interference due to ambient light that is too bright.	Too much ambient light is entering the slot.	Make sure the instrument is not exposed to too much ambient light, e. g. direct sunlight, during the measurement process.

Temperature out of specification.	The ambient temperature was too high or too low.	Make sure the ambient temperature is within the specifications.
USB Power Supply Defective (< 450mA or < 4V).	Defective USB port.	Use a different USB port on the computer or a different computer.
	Using a USB hub.	Connect the instrument directly to the computer.
	Defective Micro-USB cable.	Contact the service department.
Irrecoverable hardware error.	Irrecoverable hardware error.	Contact the service department.

6 Maintenance and cleaning

6.1 Maintenance

The Absorbance 96 is maintenance-free. Each time the instrument is switched on, an internal self-test is carried out to ensure there are no malfunctions.

There are no parts within the Absorbance 96 that can be serviced by the customer. It is only necessary to ensure that the device is kept clean.

The accuracy, linearity and reproducibility of the device can be checked with a reference plate. Byonoy recommends the reference plate from Hellma GmbH (item code 666-R013), for which the following steps are described.

Accuracy

1. Measure the plate at the desired wavelength. Ensure that there is no dust or other contamination on the reference plate.

2. Compare results taking the measurement uncertainty and specifications of the reader into account and use the following formula:
   $OD_{RP} - MU - AS \leq OD_{RES} \leq OD_{RP} + MU + AS$

   OD_{RP}: Optical density of the reference plate at the desired wavelength. This value is found on the calibration certificate from the manufacturer of the reference plate.

   MU: Measurement uncertainty of the reference plate. This value is found on the calibration certificate from the manufacturer of the reference plate.

   AS: Accuracy specification of the reader at measured optical density. This value is shown in chapter 7.

   OD_{RES}: The optical density measured by the reader at the desired wavelength.

   Example:

   OD_{RP}: 1.554

   MU: ± 0.0079

   AS: ≤ 1 % + 0.010 OD from 0.0–2.0 OD

OD_{RES}: 1.573

(1) $1.554 - 0.0079 - (1.554*0.01 + 0.010) \leq OD_{RES} \leq 1.554 + 0.0079 + (1.554*0.01 + 0.010)$

(2) $1.52056 \leq OD_{RES} \leq 1.58744$

The measured optical density of the reader lies within the calculated range.

3. Rotate the reference plate by 180 degrees and repeat steps 1 and 2.

4. If all Results (OD_{RES}) are within the range, the accuracy of the device has been verified.

Linearity

With the Hellma reference plate, you can check the accuracy at 6 different OD points. If the accuracy for all these points has been verified, the linearity of the reader is also verified.

Reproducibility

1. Measure the plate at the desired wavelength for at least 3 times. Ensure that there is no dust or other contamination on the reference plate.

2. Calculate the standard deviation OD_{SD} for each well.

3. Compare the measured standard deviation and specifications of the reader using the following formula:

   $OD_{SD} \leq LS$

   OD_{SD}: Calculated standard deviation for each well

   LS: Linearity specification of the reader at measured optical density. This value is found in chapter 7.

In case that the results of accuracy, linearity or reproducibility are outside the range, please contact the service department.

There are no recommended intervals for performing accuracy, linearity, and reproducibility checks. The customer may refer to their own quality control requirements.

Please follow the plate manufacturer's recalibration instructions for the reference plate.

6.2 Cleaning

Remove the Micro-USB cable from the instrument before cleaning.

Make sure before cleaning, that there is no microtiter plate in the instrument.

Cleaning the housing

The surfaces of the housing should be cleaned regularly. For this purpose, you can use e. g. a cloth, or a sponge lightly wetted in water. For heavier soiling, clean the surface of the housing with a mild soap solution diluted with water or glass cleaner and then wipe with a lightly moistened cloth or sponge to remove any residue. Do not use scouring agents.

Cleaning the slot

To clean the slot of the Absorbance 96 open the four screws on the bottom of the instrument (see Figure 3) using the Hex key provided.

Do not loosen any screws that are not explicitly marked in the manual, as this can lead to a malfunction and may void the instrument's warranty.

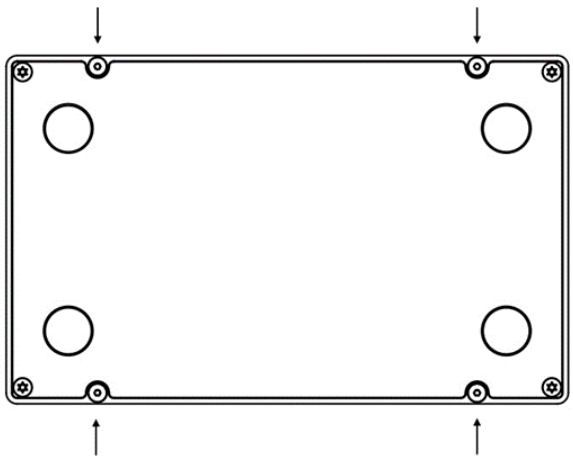

Figure 3. Bottom side of the instrument

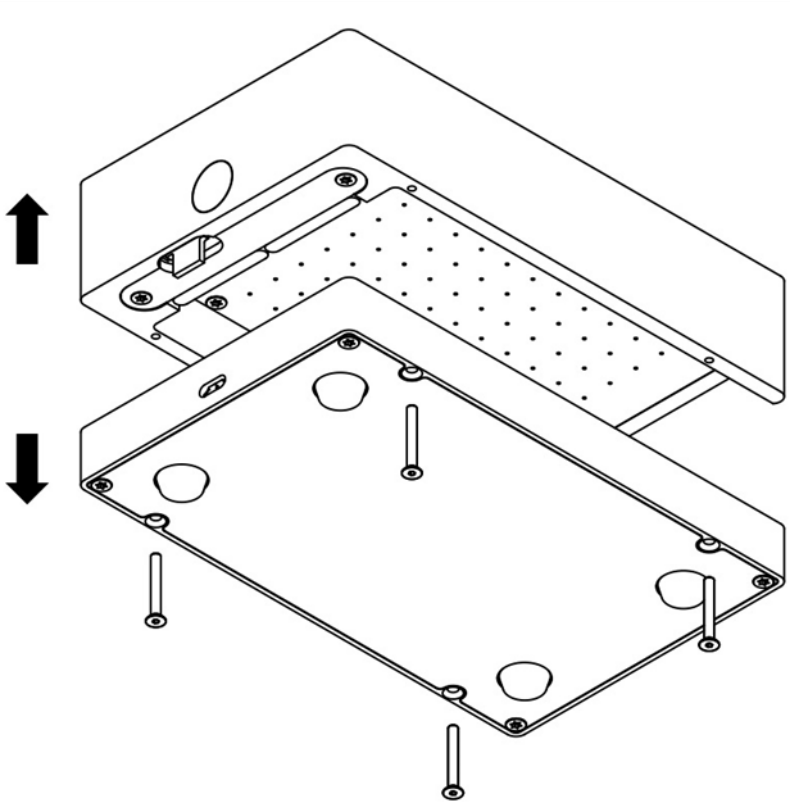

Figure 4. Pull the instrument apart into its two components

Carefully pull apart the top and the bottom of the instrument to separate the plug connection on the back of the instrument.

ⓘ **To avoid damaging the rigid plug connection between the top and bottom of the instrument, grasp the instrument at the back during the pull movement and avoid any tilting movement.**

Use a dry microfiber cloth or a bellows to carefully remove dust or dirt from the surface. If this is not enough, the microfiber cloth can be slightly soaked with 80 % ethanol to carefully remove dust or contamination from the surface.

Do not allow water or other liquids to get inside the instrument. If this happens, return the device to the manufacturer for inspection.

Warnings for cleaning

When cleaning, pay attention to the following warnings. Failure to observe these warnings may result in damage to the instrument. This can lead to a reduction of the service life or in measurement errors:

Always avoid spraying liquid directly onto the surfaces of the Absorbance 96. This is especially important for the inside of the slot, where there are optical elements that are very sensitive and essential for the functioning of the instrument.

Never clean the inside of the slot with sharp or abrasive scourges, and do not use aggressive solvents or corrosive agents.

Biological hazard: Always wear gloves during cleaning operations that may involve contact with biological or generally hazardous materials or liquids.

6.3 Technical support

In case of problems with the instrument, please contact the manufacturer's service department or your local representative.

Biological hazard: It is your responsibility to decontaminate the instrument and all accessories before servicing and before returning the instrument or accessories to the manufacturer.

For decontamination of the Absorbance 96, follow the government guidelines for inactivation of organisms used in biological laboratories.

6.4 Repairs

Repairs on the device may only be carried out by the manufacturer. Please contact the service department. The product warranty is voided if the device is modified by unauthorized persons, or different parts are installed.

7 Technical specifications

Table 3. Performance and technical data

Parameter	Value
Type of product	Absorbance reader
Product name	Absorbance 96
Operating Software	Absorbance 96 App
Service life	10 years at an average use of 4h/day
Housing material	Aluminium
Place for use	Laboratory
Degree of contamination	2
Temperature for storage/measurement	5–40 °C
Temperature (Transport)	-10–50 °C
Relative tolerated humidity (storage/measurement)	Max. 70 %
Measurement method	Absorbance
Measuring technique	Endpoint and Kinetic
Microplate types	96-well, flat bottom
Light source	Up to 4 LEDs
Filters	Up to 4
Detection	96 Photodiodes
Measurement range	0–4.0 OD
Resolution	0.001 OD
Accuracy*	405 nm: ≤ 1.5 % + 0.010 OD from 0.0–2.0 OD ≤ 3 % + 0.010 OD from 2.0–3.0 OD ≥ 450 nm: ≤ 1 % + 0.010 OD from 0.0–2.0 OD ≤ 1.5 % + 0.010 OD from 2.0–3.0 OD
Reproducibility**	≤ 0.5 % + 0.005 OD from 0.0–2.0 OD ≤ 1 % + 0.010 OD from 2.0–3.0 OD
Linearity***	405 nm: ≤ 1.5 % from 0,0–2.0 OD ≤ 3 % from 2.0–3.0 OD

	≥ 450 nm: ≤ 1 % from 0,0–2.0 OD ≤ 1.5 % from 2.0–3.0 OD
Connection to computer	USB 2/USB 3 with 5 VDC and max. 3 A
Dimensions	55 x 96 x 154 mm
Power supply	5 VDC
Nominal value/Characteristic of the fuse	1 A/very fast-acting
Power input	2.5 W
Weight	900 g
System requirements (App)	Microsoft Windows: Windows 7 or above Mac OS: High Sierra 10.13 or above

*Accuracy is the maximum deviation between the determined value and the true value.

**Reproducibility is the maximum deviation between the determined values when the measurement is repeated directly.

***Linearity is the maximum deviation between the true and the determined increase of the value.

8 Guarantee

The regular warranty period of the Absorbance 96 is 24 months. If a defect manifests itself in your device during the warranty period, please contact the service department directly.

The instrument may only be operated in technically perfect condition. In the event of defects that could endanger employees or third parties, the device may only be used again after it has been repaired by the manufacturer.

This warranty does not cover damage caused by improper use or external mechanical influences, transport damage, or unauthorized intervention in the device by unauthorized persons.

9 Compliance

9.1 CE

This product complies with the applicable European Union directives and regulations.
For the full EU Declaration of Conformity, see Annex I of this document.

9.2 FCC

This device complies with part 15 of the FCC Rules. Operation is subject to the following two conditions: (1) This device may not cause harmful interference, and (2) this device must accept any interference received, including interference that may cause undesired operation.

Note:
This equipment has been tested and found to comply with the limits for a Class A digital device, pursuant to part 15 of the FCC Rules. These limits are designed to provide reasonable protection against harmful interference when the equipment is operated in a commercial environment. This equipment generates, uses, and can radiate radio frequency energy and, if not installed and used in accordance with the instruction manual, may cause harmful interference to radio communications. Operation of this equipment in a residential area is likely to cause harmful interference in which case the user will be required to correct the interference at his own expense.

Responsible Party – U.S. Contact Information:
Americas Compliance Consulting LLC dba iCertifi
2445 NE Division Street, Suite 202
Bend, Oregon 97703 USA
FCC_sDoC@icertifi.com
icertifi.com

9.3 ISED

This product meets the applicable Innovation, Science and Economic Development Canada technical specifications.

Le présent produit est conforme aux spécifications techniques applicables d'Innovation, Sciences et Développement économique Canada.

This device needs to be at least at 20cm distance of user at normal operation.

byonoy

EU Declaration of Conformity

Byonoy GmbH
Schützenstraße 21
22761 Hamburg
GERMANY

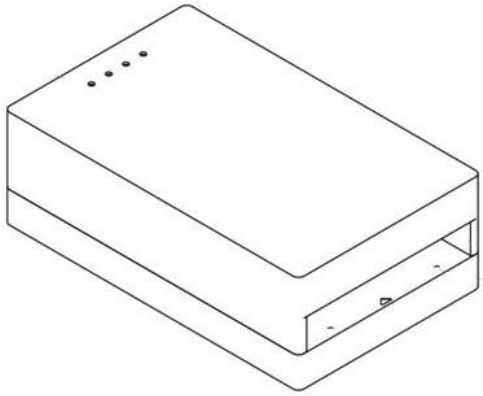

The Product named below fulfills the relevant fundamental requirements of the EU directives and standards listed. This declaration of conformity is issued under the sole responsibility of the manufacturer.

Product Type

Absorbance reader

Product name

Absorbance 96

Model Number

DE MMA

Serial Number Range

BYOABSXXXXX
[XXXXX = 00001 – 99999]

Software

Absorbance 96 App - Any future software updates will be released only if the product continues to meet all applicable EU requirements, including the EMC Directive 2014/30/EU and the RoHS Directive 2011/65/EU.

Relevant EU directives

2014/30/EU	Elektromagnetische-Verträglichkeit-Richtlinie (EMV)
2011/65/EU	Restriction of Hazardous Substances (RoHS)

Relevant EU standards

EN IEC 61326-1:2021	Electromagnetic Compatibility (EMC) - Electrical equipment for measurement, control and laboratory use
EN 61010-1:2010/A1:2019	Safety requirements for electrical equipment for measurement, control & laboratory use – Part 1
EN IEC 63000:2018	Technical documentation for the assessment of electrical and electronic products (EEE) with respect to the restriction of hazardous substances (RoHS)

Hamburg, 13.08.2025

Yousef Nazirizadeh
CEO